RoHS Compliant

端子图

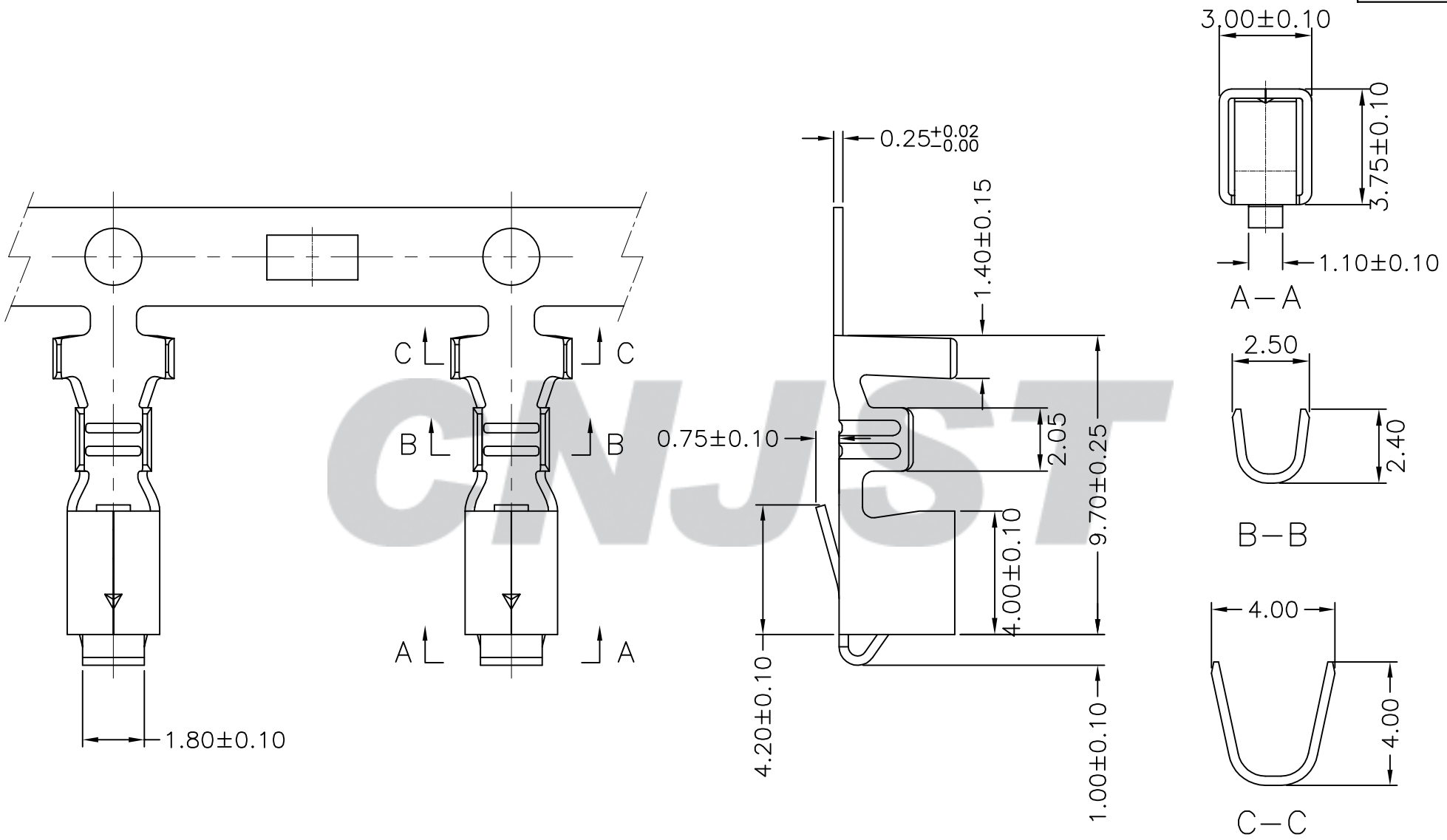

CNJST

REV.	DATE	DESCRIPTION	APPD.
	2013.01.01	NEW RELEASE	

Wire Range	Insulation O.D.	QTY/Reel	Material	Plating
AWG #22～#18	3.00mm(max)	3,000Pcs	Phosphor Bronze	Tin-plated

Tolerance
X.X ±0.30
X.XX ±0.20
X.XXX ±0.10
Angle ±3.0°

UNIT: mm

Model Name:3.96mm PITCH CRIMP TERMINAL
Model No: A3962T-PA-Z

SCALE:FULL | REVISION:B/1

CNJST 浙江捷仕泰电子有限公司
ZHEJIANG JIESHITAI ELECTRONIC CO., LTD

Drawn:张育斌2016.06.13
Checked: 林旭芝
Approved: 刘祚杰
DWG NO.CNJST/GCDZ-0022