RoHS Compliant

成品图

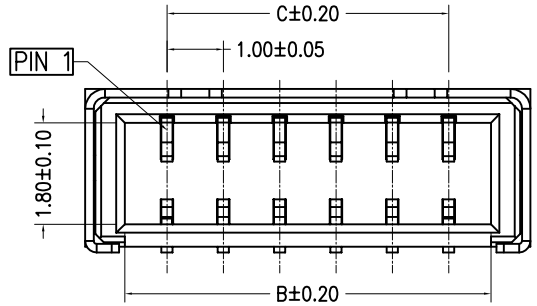

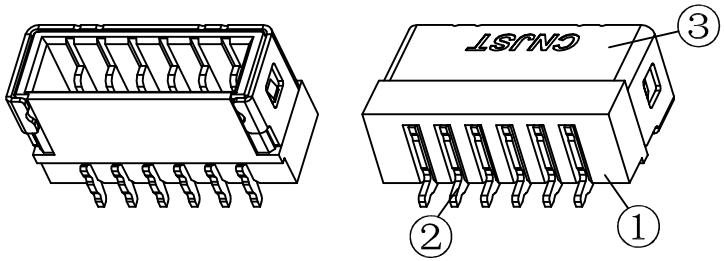

SPECIFICATION

1 Contact resistance: ≤20mΩ
2 Insulation resistance: ≥100MΩ
3 Rated voltage: 150 V AC DC
4 Rated current: 1.0 A AC DC
5 Withstand Voltage: 500V AC/minute
6 Temperature Range:-25℃～ +85℃

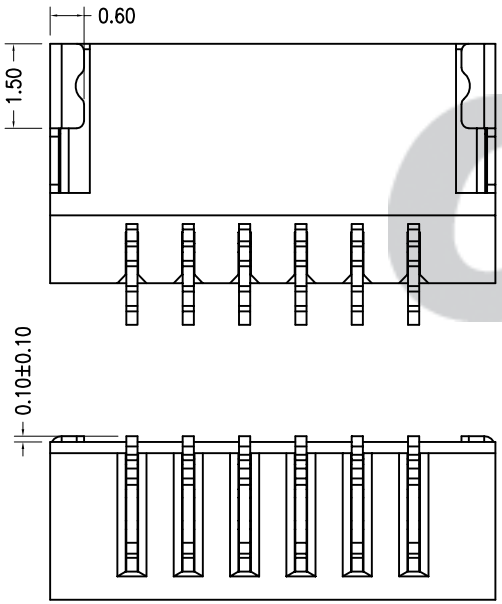

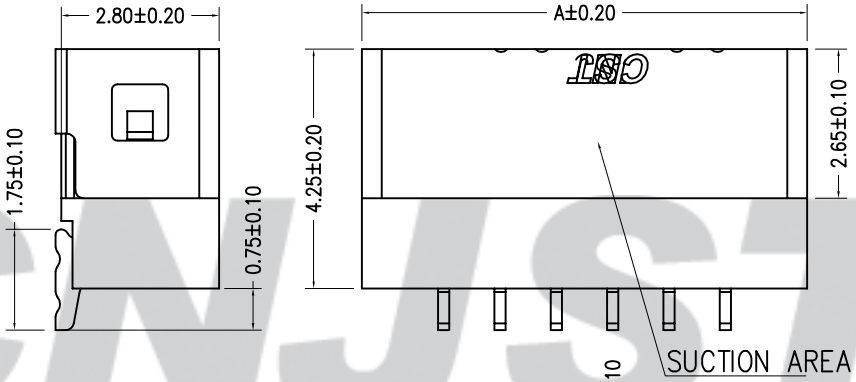

ORDER INFORMATION:

A1012AWR -**-F2MB-R

- PART No.
- No. OF CIRCUITS: 02~12
- PLASTIC MATERIAL: F2M=LCP(NATURE)
- PLATING: A=Tin-plated B=Matte Sn
- PACKAGING: R=REEL

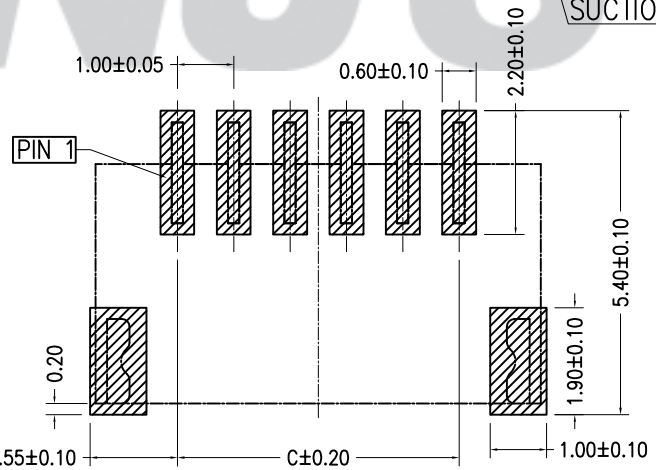

SUGGESTED PCB LAYOUT
(COMPONENT SIDE)

Circuits	Dimensions(mm)		
	A	B	C
02	3.90	2.50	1.00
03	4.90	3.50	2.00
04	5.90	4.50	3.00
05	6.90	5.50	4.00
06	7.90	6.50	5.00
07	8.90	7.50	6.00
08	9.90	8.50	7.00
09	10.90	9.50	8.00
10	11.90	10.50	9.00
11	12.90	11.50	10.00
12	13.90	12.50	11.00

专利产品

REV.	DATE	DESCRIPTION	APPD.
B/0	2016.04.12	NEW RELEASE	

NO.	DESCRIPTION	QTY	MATERIAL	PLATING/COLOR
③	Solder Tab	2	Phosphor Bronze	Mattn Sn
②	Contacts	02～12	Phosphor Bronze	Mattn Sn
①	Insulator	1	LCP(UL94V-0)	Nature

Tolerance
X.X ±0.30
X.XX ±0.20
X.XXX ±0.10
Angle ±3.0°

UNIT: mm

Model Name:1.00mm pitch 90° WAFER-SMT TYPE
Model No: A1012AWR-**-F2MB-R
SCALE:FULL
REVISION:B/0

CNJST 浙江捷仕泰电子有限公司
ZHEJIANG JIESHITAI ELECTRONICS CO.,LTD.

Drawn: 张育斌2016.04.13
Checked: 林旭芝
Approved: 刘祚杰
DWG NO.CNJST/GCCP-0394

CNJST