RoHS Compliant

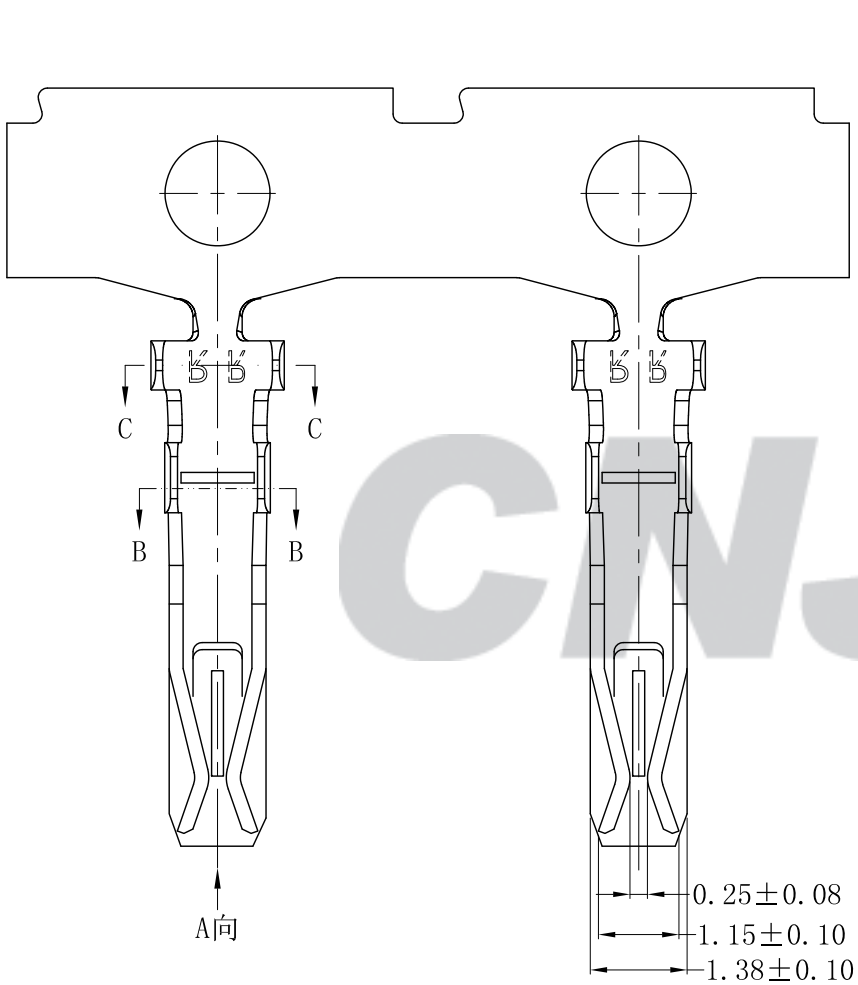

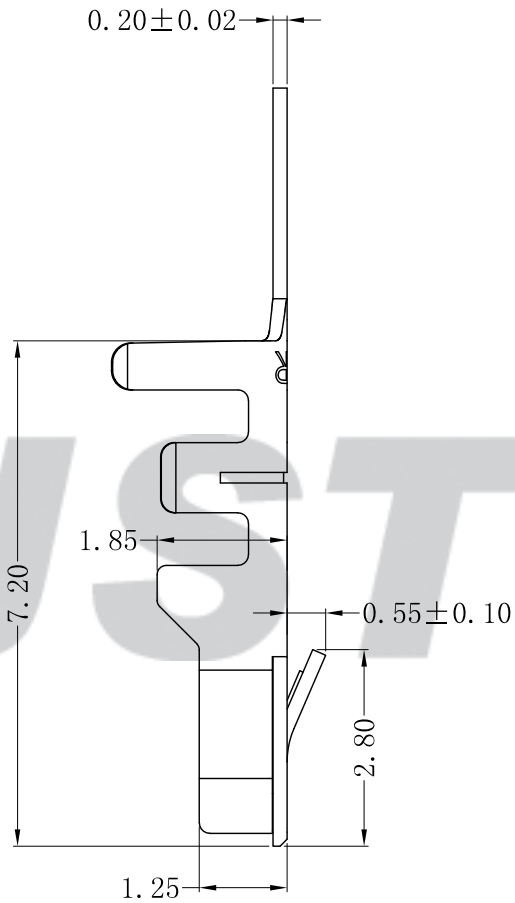

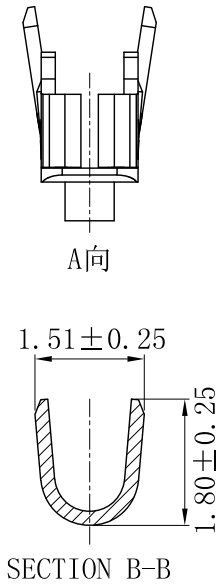

注：建议客户优先选择我司公母端产品配套使用，若在没有使用我司公母端配套产品情况下，出现因产品不匹配的质量问题，我司将不承担任何风险及责任。

REV.	DATE	DESCRIPTION	APPD.	Wire Range	Insulation O.D.	QTY/Reel	Material	Plating
C/0	2022.08.04	更新模板；尺寸变更详见 ECR2022013	王程伟					
B/0	2020.01.04	NEW RELEASE		AWG #22～#28	1.50mm (Max)	10,000PCS	Phosphor Bronze	Tin-plated

Tolerance
X.X ±0.30
X.XX ±0.20
X.XXX ±0.10
Angle ±3.0°

UNIT: mm

CNJST 捷仕泰企业

Model No: QA2004T-PA-Z

Model Name:2.00mm PITCH CRIMP TERMINAL

SCALE:FULL

REVISION:C/0

Drawn: 王程伟 2022.08.04

Checked: 吴丹平

Approved: 林旭芝

DWG NO.CNJST/GCDZ-0108