RoHS Compliant

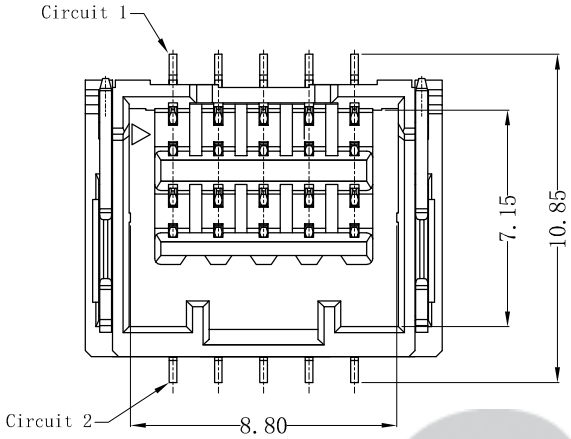

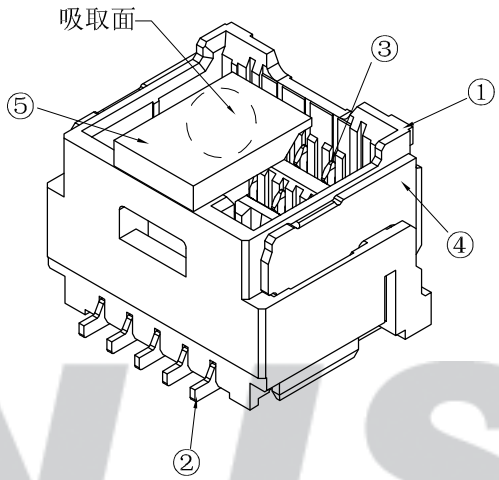

SPECIFICATION

1 Contact resistance: ≤20mΩ
2 Insulation resistance: ≥500MΩ
3 Rated voltage: 100 V AC DC
4 Rated current: 1.5 A AC DC
5 Withstand Voltage: 500V AC/minute
6 Temperature Range:-40℃～ +125℃

ORDER INFORMATION:

QA1502AWV-205-D1MB-R-X

- PART No.
- No.OF CIRCUITS: 2X5
- PLASTIC MATERIAL: D1M=PA9T
- PLATING: B=Matte Sn
- PACKAGING: R=Reel

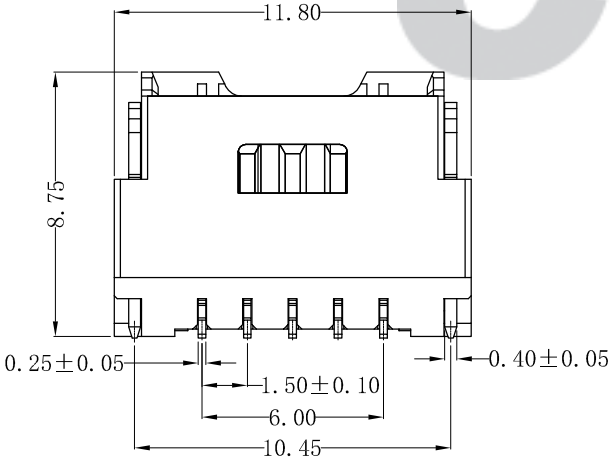

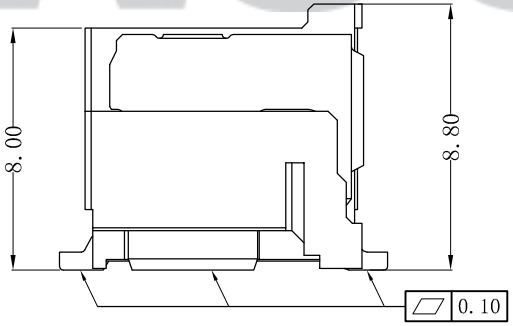

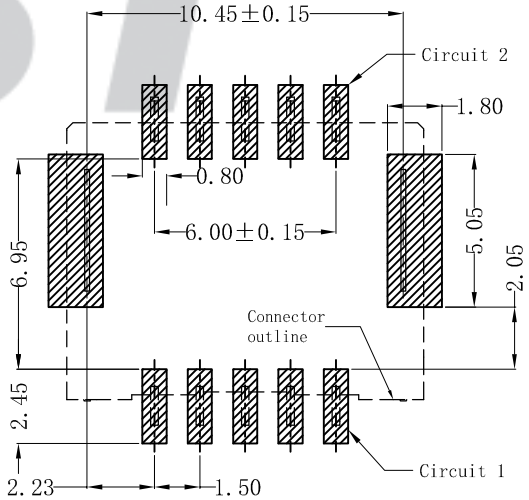

SUGGESTED PCB LAYOUT
(COMPONENT SIDE)(TOLERANCE:±0.05)

注：建议客户优先选择我司公母端产品配套使用，若在没有使用我司公母端配套产品情况下，出现因产品不匹配的质量问题，我司将不承担任何风险及责任。

专利产品

REV.	DATE	DESCRIPTION	APPD.	NO.	DESCRIPTION	QTY	MATERIAL	PLATING/COLOR
				⑤	Cap	1	LCP(UL94V-0)	Nature
				④	Solder Tab	2	Brass	Matte Sn
				③	Contacts	5	Phosphor Bronze	Matte Sn
C/1	2023.7.31	统一标准	马海媚	②	Contacts	5	Phosphor Bronze	Matte Sn
C/0	2022.09.15	NEW RELEASE	黄羡程	①	Insulator	1	PA9T(UL94V-0)	Nature

Tolerance
X.X ±0.30
X.XX ±0.20
X.XXX ±0.10
Angle ±3.0°

UNIT: mm

CNJST 捷仕泰企业

Model No.: QA1502AWV-205-D1MB-R-X

Model Name:1.50mm PITCH 180° WAFER-SMT TYPE

SCALE:FULL | REVISION:C/1

Drawn:马海媚 2023.7.31
Checked: 吴丹平
Approved: 林旭芝
DWG NO.CNJST/GCCP-0826